DOOR AND JAMB DETAIL

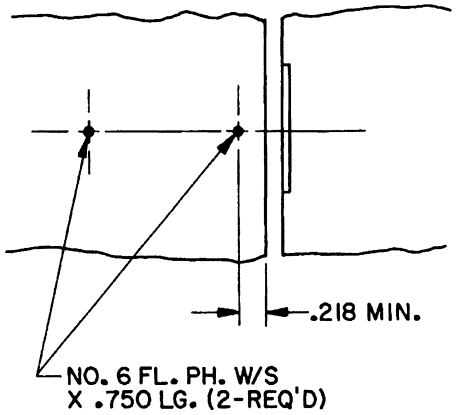

BOLT DETAIL

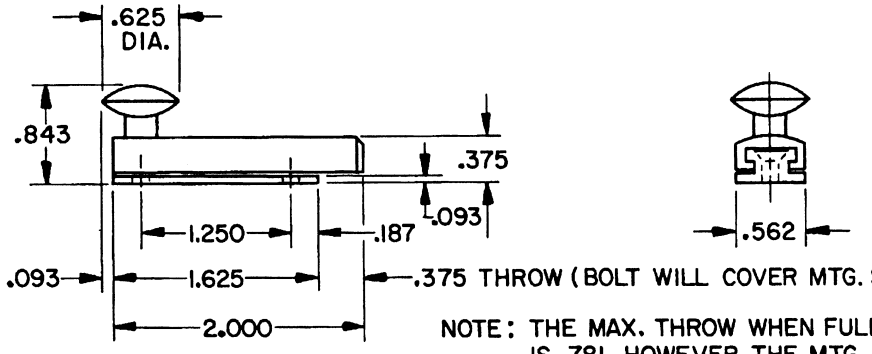

NOTE: THE MAX. THROW WHEN FULLY EXTENDED IS .781. HOWEVER THE MTG. SCREW WILL BE VISIBLE WHEN EXTENDED TO THIS MAXIMUM.

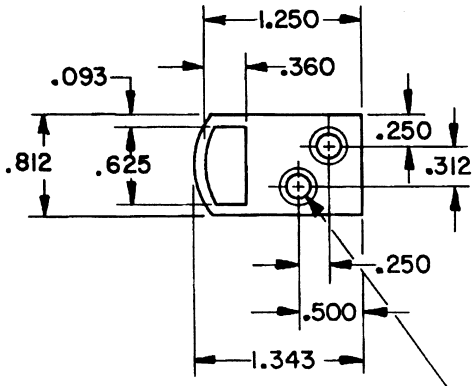

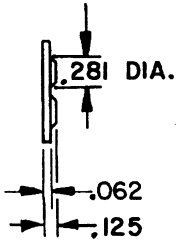

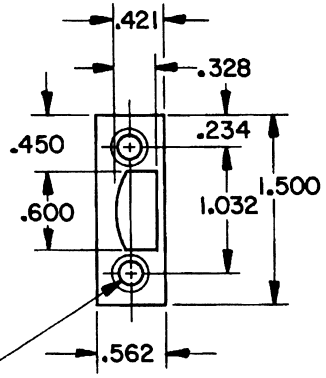

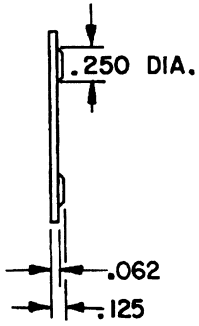

UNIVERSAL STRIKE

NO. 6 FL. PH. W/S
X .750 LG. (2-REQ'D)

MORTISE STRIKE

BALDWIN

0320 SURFACE BOLT

TEMPLATE NO. VARIATIONS	TEMPLATE NO.
	A132

EFFECTIVE: 9-1-86 R. Adz-8

DO NOT SCALE DRAWING

©1986 by Baldwin Hardware Corporation